CMOS CAMERA MODULES

your BEST camera module partner

KLT-P4MA-IMX219 V1.4

8MP Sony IMX219 MIPI Interface Auto Focus Camera Module

Front View

Back View

Specifications

Camera Module No.	**KLT-P4MA-IMX219 V1.4**
Resolution	8MP
Image Sensor	IMX219
Sensor Type	1/4"
Pixel Size	1.12 um x 1.12 um
EFL	5.54 mm
F.NO	2.40
Pixel	3296 x 2480
View Angle	44.6°(DFOV) 36.4°(HFOV) 27.8°(VFOV)
Lens Dimensions	8.50 x 8.50 x 5.93 mm
Module Size	31.90 x 9.80 mm
Module Type	Auto Focus
Interface	MIPI
Auto Focus VCM Driver IC	DW9714P
Lens Model	KLT-LENS-50190A5
Lens Type	650nm IR Cut
Operating Temperature	-20°C to +60°C
Mating Connector	24-5804-030-000-829

www.KaiLapTech.com sales@KaiLapTech.com Tel: (852) 6908 1256 Fax: (852) 3017 6778

All rights reserved @ Kai Lap Technologies Group Ltd. Specifications subject to change without notice.

CMOS CAMERA MODULES

your BEST camera module partner

KLT-P4MA-IMX219 V1.4

8MP Sony IMX219 MIPI Interface Auto Focus Camera Module

Top View

Side View

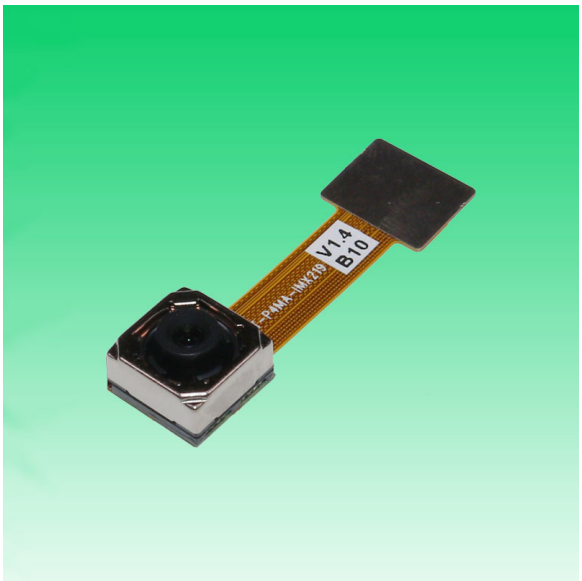

Bottom View

Mating Connector

www.KaiLapTech.com sales@KaiLapTech.com Tel: (852) 6908 1256 Fax: (852) 3017 6778

All rights reserved @ Kai Lap Technologies Group Ltd. Specifications subject to change without notice.

Version	Information	Date
V1.0	First Version	10-9-2019
V1.4	Change lens and VCM	10-23-2021

RoHS

1	GND
2	AF-VDD2.8V
3	DVDD1.2V
4	DOVDD1.8V
5	NC
6	AVDD_GND
7	AVDD2.8V
8	DGND
9	I2C-SDA
10	I2C-SCL
11	NC
12	PWDN1
13	GND
14	MCLK
15	GND
16	DP3
17	DN3
18	GND
19	DP2
20	DN2
21	GND
22	DP1
23	DN1
24	GND
25	CLKP
26	CLKN
27	GND
28	DPO
29	DNO
30	GND

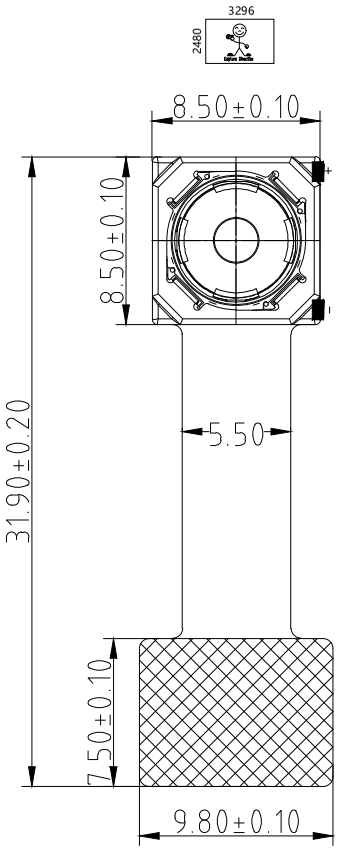

TOP VIEW

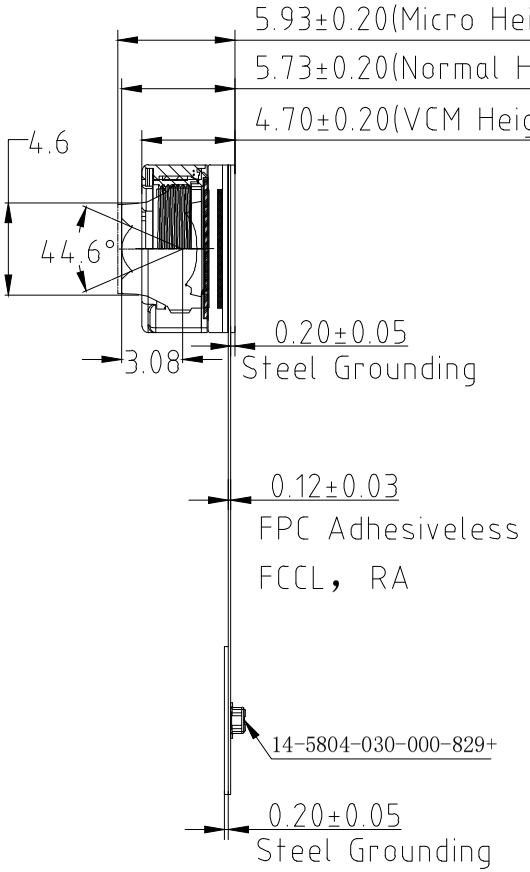

SIDE VIEW

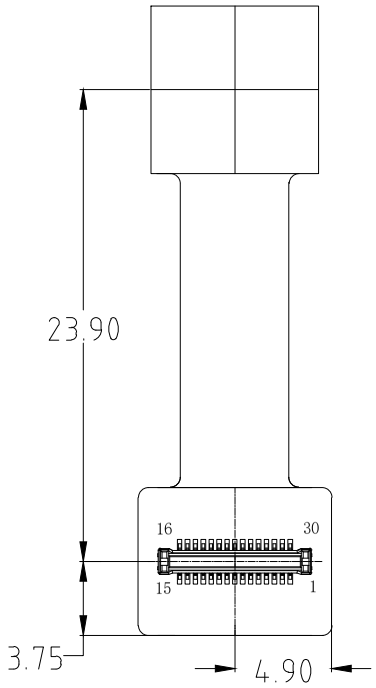

BOTTOM VIEW

Parameters:

1、Sensor specification:

Image Sensor: IMX219

Pixel: 1.12um×1.12um

Lens Type: 1/4

Important Voltage Description: DVDD1.2V (external power supply);

2、Lens specification:

FOV: 44.6°(D);36.4°(H);27.8°(V)

F/NO.: 2.4

TV distortion: <1.5%

Focal length: 5.54mm

Composition: 5P+IR FILTER

IR Cut Coating: 650nm±10nm@50%

Kai Lap Technologies Group Ltd

Designed By	Kevin	Model Name:	KLT-P4MA-IMX219 V1.4		
Checked By	Aouly_Yan	Projection Type: Third Angle	Unit: mm	Material: ----------	
			Scale: 1:1	Sheet: 1 of 1	Version: 1/0

Lens Model: KLT-LENS-50190A5

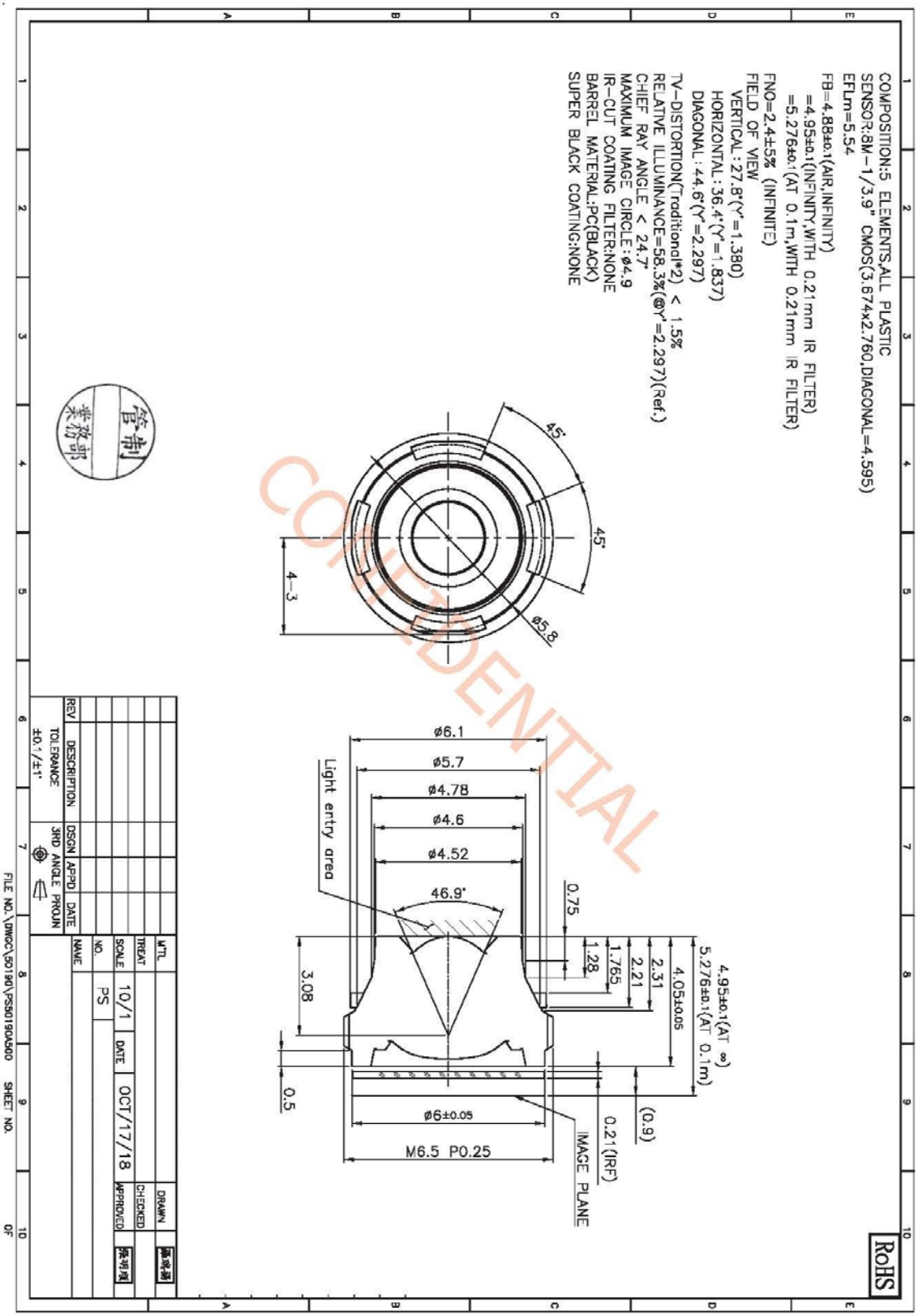

All rights reserved @ Kai Lap Technologies Group Ltd. Specifications subject to change without notice.

DW9714P

Upgraded Conventional AF Driver IC

FEATURES

120mA output driver with 10-bit resolution DAC
Smart Actuator Control (SAC™) modes
Supply voltage (V_{DD}): 2.3V to 4.3V
I/O voltage (V_{IN}): 1.8V to V_{DD}
Fast mode and Fast mode plus I^2C interface compatible
Power On Reset (POR)
Power Down (PD) mode current consumption less than 1uA
Package: 6-pin WLCSP (0.77mm x 1.14mm x 0.30mm)

APPLICATIONS

Mobile camera
Digital still camera
Camcorder
Web camera
Action camera

GENERAL DESCRIPTION

The DW9714P designed for linear control of Voice Coil Motors (VCM). This device is compatible with DW9714. The DW9714P has a single 10-bit DAC with 120mA output current sink capability. This device features SAC™ mode which can minimize the mechanical vibration and achieve very fast mechanical settling time. The SAC™ is protected by patent and registered trademark of DONGWOON ANATECH.

The DW9714P operates from a single 2.3V to 4.3V supply. The internal DAC is controlled via an I^2C serial interface that operates at clock rate up to 1MHz. The I^2C address for the DW9714P is 0x18. The DW9714P offers PD mode with current consumption less than 1uA.

The DW9714P can be used for auto focus applications in mobile cameras, digital still cameras, camcorders, web cameras and action cameras.

TYPICAL APPLICATION CIRCUIT

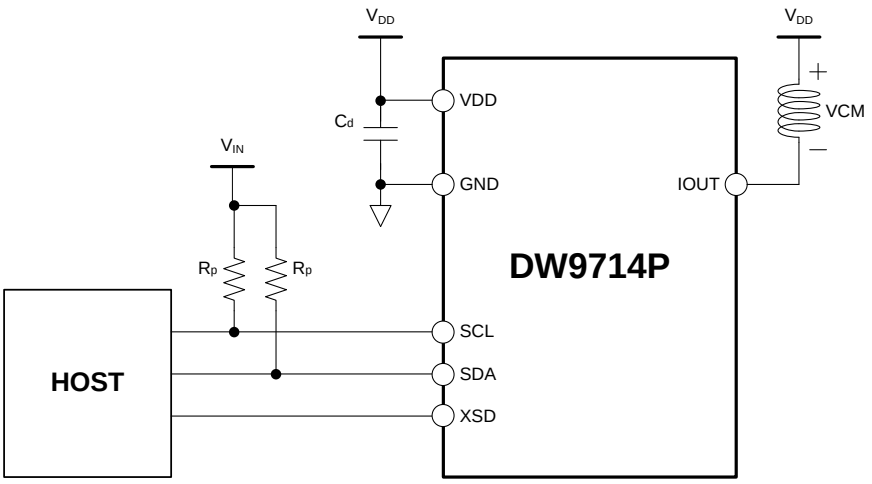

Figure 1. Typical application circuit

0.4mmPitch Series5804

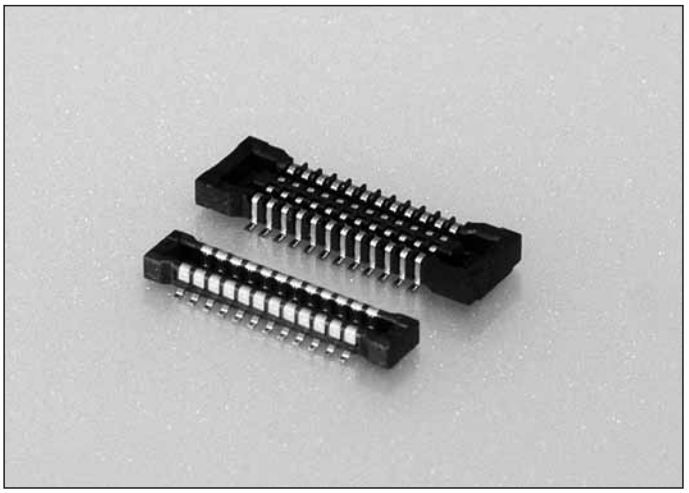

シリーズ (Series)	5804
基板間高さ (Stacking Height)	0.9mm
極間隔 (Pitch)	0.4mm
極数 (No. of Positions)	10～80
定格電流 (Rated Current)	DC 0.3A
定格電圧 (Rated Voltage)	DC 50V
耐電圧 (D.W.Voltage)	AC 250Vrms/min.
コンタクト材質 (Contact Material)	銅合金　Copper alloy
インシュレータ材質 (Insulator Material)	耐熱樹脂　Heat resistance plastic
使用温度範囲 (Operating Temperature)	−40～85℃

SERIES 5804

◇概要
5804シリーズは、市場における携帯電話やデジタルAV機器等の小型化、薄型化の要求に基づき開発された0.4mmピッチ、嵌合高さ0.9mmの超低背基板対基板コネクタです。幅寸法は2.4mmと、より一層の省面積化を実現しています。

◇Outline
Series 5804 is a 0.4mm pitch and ultra low profile Board to Board connector with 0.9mm in mating height is developed to meet marketing needs for minimum size of cell phones, digital AV equipment, etc. A great deal of space saving is achieved with 2.4mm in width.

◇特長
(1) スリム・低背でありながらコネクタ裏面に下壁を設け金属の露出がなく、製品の端子ランド対向間にパターン配線が可能であり、高密度実装に最適な構造です。
(2) 高い接触信頼性を実現するために、接触構造は振動や落下衝撃に強い挟み込み構造を採用するとともに、接触部は飛散したフラックスや付着した異物を排除する独自の構造を採用しました。
(3) 嵌合時のロック構造は、独自のロック構造を採用。低背でありながらも優れたクリック感と、抜去時の保持力を強化しています。

◇Features
(1) Pattern can be laid out between connector leads, which is suitable for high density package, because no metal is exposed on the bottom of the connector besides its slim and low profile.
(2) The pinching structure, highly resistant to vibration and drop shock, is adopted in contacts and the original structure excluding splashed flux or foreign matters attached is adopted on contacting points in order to obtain high contacting reliability.
(3) Original locking structure is adopted for mating lock mechanism that realizes the firm clicking response and enhances the retention force when connectors unmated even with their low profile.

本カタログには推奨めっきを掲載しております。めっき種類・仕様、ならびに生産対応可能極数については営業部に御確認願います。
Recommended plating types are mentioned in this catalogue.
For other plating types and their specifications, and available numbers of positions, please feel free to contact our sales department.

0.4mm Pitch

SERIES

5804

プラグ/リセ ST SMT

Plug/Receptacle Vertical SMT

●Plug

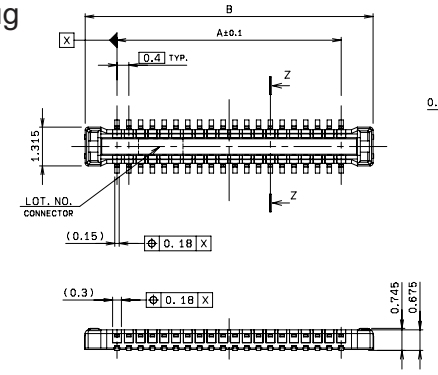

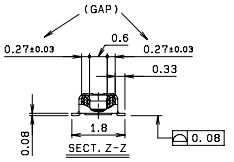

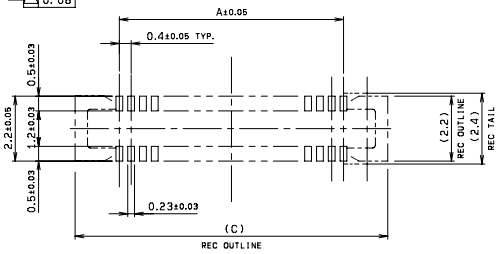

MOUNTING LAYOUT

極数 NO. OF POS.	A	B	C
10	1.6	3.76	4.6
12	2.0	4.16	5.0
14	2.4	4.56	5.4
16	2.8	4.96	5.8
18	3.2	5.36	6.2
20	3.6	5.76	6.6
22	4.0	6.16	7.0
24	4.4	6.56	7.4
26	4.8	6.96	7.8
30	5.6	7.76	8.6
32	6.0	8.16	9.0
34	6.4	8.56	9.4
40	7.6	9.76	10.6
44	8.4	10.56	11.4
50	9.6	11.76	12.6
54	10.4	12.56	13.4
60	11.6	13.76	14.6
70	13.6	15.76	16.6
80	15.6	17.76	18.6

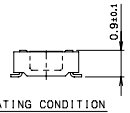

MATING CONDITION

●Receptacle

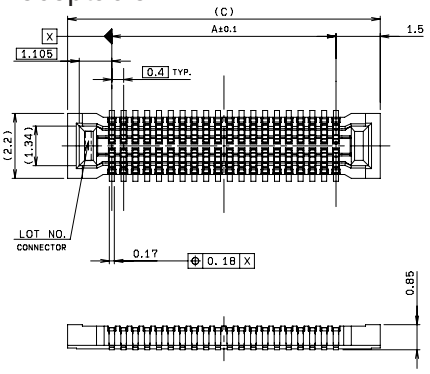

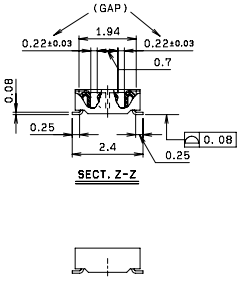

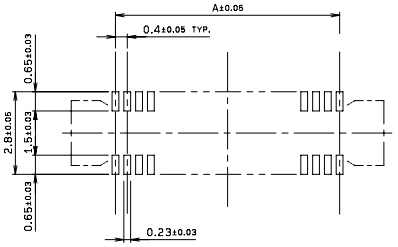

MOUNTING LAYOUT

極数 NO. OF POS.	A	C
10	1.6	4.6
12	2.0	5.0
14	2.4	5.4
16	2.8	5.8
18	3.2	6.2
20	3.6	6.6
22	4.0	7.0
24	4.4	7.4
26	4.8	7.8
30	5.6	8.6
32	6.0	9.0
34	6.4	9.4
40	7.6	10.6
44	8.4	11.4
50	9.6	12.6
54	10.4	13.4
60	11.6	14.6
70	13.6	16.6
80	15.6	18.6

●Packaging

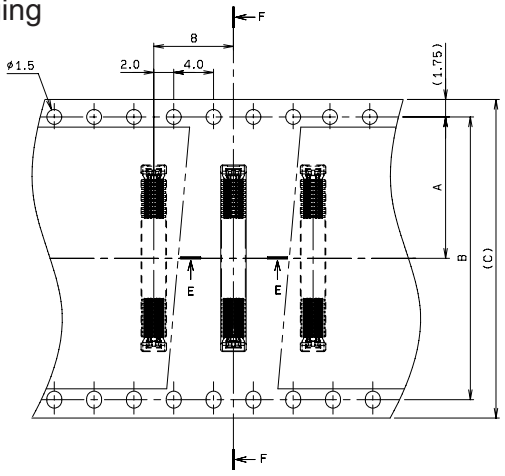

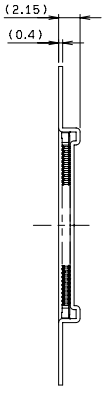

SECT. F-F

Receptacle

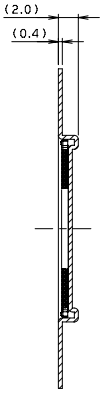

SECT. F-F

Plug

極数 NO. OF POS.	A	B	C
10	5.5	-	12.0
12	5.5	-	12.0
14	7.5	-	16.0
16	7.5	-	16.0
18	7.5	-	16.0
20	7.5	-	16.0
22	7.5	-	16.0
24	7.5	-	16.0
26	7.5	-	16.0
30	7.5	-	16.0
32	7.5	-	16.0
34	11.5	-	24.0
40	11.5	-	24.0
44	11.5	-	24.0
50	11.5	-	24.0
54	11.5	-	24.0
60	11.5	-	24.0
64	11.5	-	24.0
70	11.5	-	24.0
80	14.2	28.4	32.0

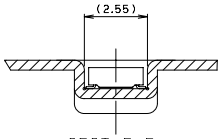

SECT. E-E

Receptacle

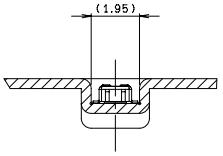

SECT. E-E

Plug

注文コード ORDERING CODE

X4 5804 0XX 000 829+

1：Plug
2：Receptacle

極数 Number of positions

RoHS対応品
RoHS Compliant Product

注）生産可能極数については営業部にご確認願います。
Note) Feel free to contact our sales department for available numbers of positions.

梱包数量：3000個/リール
PACKING QUANTITY：3000/Reel

SONY

[Product Brief]

Ver.1.0

IMX219PQ

Diagonal 4.60mm (Type 1/4.0) 8M Pixel CMOS Image Sensor with Square Pixel for Color Cameras

Description

IMX219PQ is a diagonal 4.60mm (Type 1/4.0) CMOS active pixel type image sensor with a square pixel array and 8.08M effective pixels. This chip operates with three power supplies, analogue 2.8V, digital 1.2 V, and IF 1.8 V, and has low power consumption. High sensitivity, low dark current, and no smear are achieved through the adoption of R, G, and B primary color pigment mosaic filters. This chip features an electronic shutter with variable charge-storage time.
In addition, this product is designed for use in cellular phone and tablet pc. When using this for another application, Sony does not guarantee the quality and reliability of product. Therefore, don't use this for applications other than cellular phone and tablet pc. Consult your Sony sales representative if you have any questions.

Functions and Features

- ◆Back-illuminated CMOS image sensor Exmor R™
- ◆2-wire serial communication circuit on chip
- ◆CSI2 serial data output (selection of 4lane/2lane)
- ◆Timing generator, H and V driver circuits on chip
- ◆CDS/PGA on chip
- ◆10-bit A/D converter on chip
- ◆Automatic optical black (OB) clamp circuit on chip
- ◆PLL on chip (rectangular wave)
- ◆High sensitivity, low dark current, no smear
- ◆Excellent anti-blooming characteristics
- ◆Variable-speed shutter function (1 H units)
- ◆R, G, B primary color pigment mosaic filters on chip
- ◆Max. 30frame/s in all-pixel scan mode
- ◆Pixel rate: 280 [Mpixel/s] (All-pixels mode)
- ◆180 frame/s @720p with 2x2 analog (special) binning, 60 frame/s @1080p with V-crop
- ◆Datarate: Max.755Mbps/lane (@4lane), 912Mbps/Lane(@2lane)

Device Structure

- ◆CMOS image sensor
- ◆Image size : Diagonal 4.60mm (Type 1/4.0)
- ◆Total number of pixels : 3296(H) × 2512(V) approx. 8.28M pixels
- ◆Number of effective pixels : 3296(H) × 2480(V) approx. 8.17M pixels
- ◆Number of active pixels : 3280(H) × 2464(V) approx. 8.08M pixels
- ◆Chip size : 5.095mm (H) × 4.930mm (V) (w/ Scribe)
- ◆Unit cell size : 1.12μm (H) × 1.12μm (V)
- ◆Substrate material : Silicon

Functional Description

Block diagram

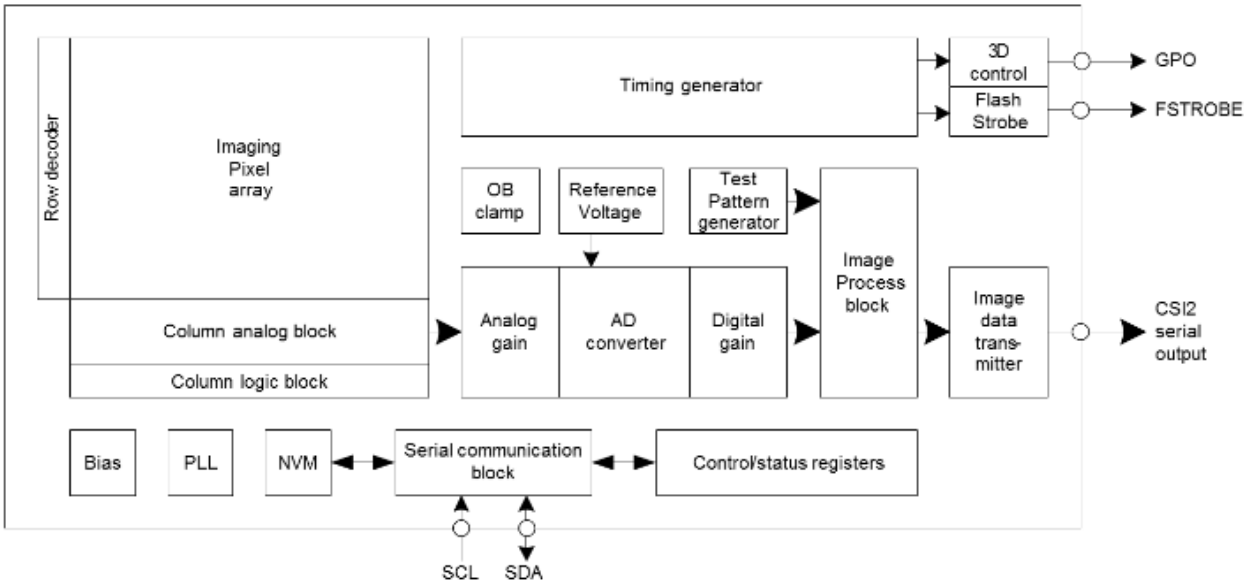

Exmor R

* Exmor R is a trademark of Sony Corporation. The Exmor R is a Sony's CMOS image sensor with significantly enhanced imaging characteristics including sensitivity and low noise by changing fundamental structure of Exmor™ pixel adopted column parallel A/D converter to back-illuminated type.

Sony reserves the right to change products and specifications without prior notice.
This information does not convey any license by any implication or otherwise under any patents or other right.
Application circuits shown, if any, are typical examples illustrating the operation of the devices. Sony cannot assume responsibility for any problems arising out of the use of these circuits.

Camera Module Pinout Definition Reference Chart

OmniVision Sony Samsung On-Semi Aptina Himax GalaxyCore PixArt SmartSens Sensors	
Pin Signal	**Description**
DGND GND	ground for digital circuit
AGND	ground for analog circuit
PCLK DCK	DVP PCLK output
XCLR PWDN XSHUTDOWN STANDBY	power down active high with internal pull-down resistor
MCLK XVCLK XCLK INCK	system input clock
RESET RST	reset active low with internal pull-up resistor
NC NULL	no connect
SDA SIO_D SIOD	SCCB data
SCL SIO_C SIOC	SCCB input clock
VSYNC XVS FSYNC	DVP VSYNC output
HREF XHS	DVP HREF output
DOVDD	power for I/O circuit
AFVDD	power for VCM circuit
AVDD	power for analog circuit
DVDD	power for digital circuit
STROBE FSTROBE	strobe output
FSIN	synchronize the VSYNC signal from the other sensor
SID	SCCB last bit ID input
ILPWM	mechanical shutter output indicator
FREX	frame exposure / mechanical shutter
GPIO	general purpose inputs
SLASEL	I2C slave address select
AFEN	CEN chip enable active high on VCM driver IC
MIPI Interface	
MDN0 DN0 MD0N DATA_N DMO1N	MIPI 1st data lane negative output
MDP0 DP0 MD0P DATA_P DMO1P	MIPI 1st data lane positive output
MDN1 DN1 MD1N DATA2_N DMO2N	MIPI 2nd data lane negative output
MDP1 DP1 MD1P DATA2_P DMO2P	MIPI 2nd data lane positive output
MDN2 DN2 MD2N DATA3_N DMO3N	MIPI 3rd data lane negative output
MDP2 DP2 MD2P DATA3_P DMO3P	MIPI 3rd data lane positive output
MDN3 DN3 MD3N DATA4_N DMO4N	MIPI 4th data lane negative output
MDP3 DP3 MD3P DATA4_P DMO4P	MIPI 4th data lane positive output
MCN CLKN CLK_N DCKN	MIPI clock negative output
MCP CLKP MCP CLK_P DCKN	MIPI clock positive output
DVP Parallel Interface	
D0 DO0 Y0	DVP data output port 0
D1 DO1 Y1	DVP data output port 1
D2 DO2 Y2	DVP data output port 2
D3 DO3 Y3	DVP data output port 3
D4 DO4 Y4	DVP data output port 4
D5 DO5 Y5	DVP data output port 5
D6 DO6 Y6	DVP data output port 6
D7 DO7 Y7	DVP data output port 7
D8 DO8 Y8	DVP data output port 8
D9 DO9 Y9	DVP data output port 9
D10 DO10 Y10	DVP data output port 10
D11 DO11 Y11	DVP data output port 11

All rights reserved @ Kai Lap Technologies Group Ltd. Specifications subject to change without notice.

CMOS CAMERA MODULES

your BEST camera module partner

Cameras Applications

www.KaiLapTech.com sales@KaiLapTech.com Tel: (852) 6908 1256 Fax: (852) 3017 6778

All rights reserved @ Kai Lap Technologies Group Ltd. Specifications subject to change without notice.

Camera Reliability Test

Reliability Inspection Item			Testing Method	Acceptance Criteria
Category		Item		
Environmental	Storage Temperature	High 60°C 96 Hours	Temperature Chamber	No Abnormal Situation
		Low -20°C 96 Hours	Temperature Chamber	No Abnormal Situation
	Operation Temperature	High 60°C 24 Hours	Temperature Chamber	No Abnormal Situation
		Low -20°C 24 Hours	Temperature Chamber	No Abnormal Situation
	Humidity	60°C 80% 24 Hours	Temperature Chamber	No Abnormal Situation
	Thermal Shock	High 60°C 0.5 Hours Low -20°C 0.5 Hours Cycling in 24 Hours	Temperature Chamber	No Abnormal Situation
Physical	Drop Test (Free Falling)	Without Package 60cm	10 Times on Wood Floor	Electrically Functional
		With Package 60cm	10 Times on Wood Floor	Electrically Functional
	Vibration Test	50Hz X-Axis 2mm 30min	Vibration Table	Electrically Functional
		50Hz Y-Axis 2mm 30min	Vibration Table	Electrically Functional
		50Hz Z-Axis 2mm 30min	Vibration Table	Electrically Functional
	Cable Tensile Strength Test	Loading Weight 4 kg 60 Seconds Cycling in 24 Hours	Tensile Testing Machine	Electrically Functional
Electrical	ESD Test	Contact Discharge 2 KV	ESD Testing Machine	Electrically Functional
		Air Discharge 4 KV	ESD Testing Machine	Electrically Functional
	Aging Test	On/Off 30 Seconds Cycling in 24 Hours	Power Switch	Electrically Functional
	USB Connector	On/Off 250 Times	Plug and Unplug	Electrically Functional

All rights reserved @ Kai Lap Technologies Group Ltd. Specifications subject to change without notice.

CMOS CAMERA MODULES

Camera Inspection Standard

your BEST camera module partner

Inspection Item			Inspection Method	Standard of Inspection
Category		Item		
Appearance	FPC/ PCB	Color	The Naked Eye	Major Difference is Not Allowed.
		Be Torn/Chopped	The Naked Eye	Copper Crack Exposure is Not Allowed.
		Marking	The Naked Eye	Clear, Recognizable (Within 30cm Distance)
	Holder	Scratches	The Naked Eye	The Inside Crack Exposure is Not Allowed
		Gap	The Naked Eye	Meet the Height Standard
		Screw	The Naked Eye	Make Sure Screws Are Presented (If Any)
		Damage	The Naked Eye	The Inside Crack Exposure is Not Allowed
	Lens	Scratch	The Naked Eye	No Effect On Resolution Standard
		Contamination	The Naked Eye	No Effect On Resolution Standard
		Oil Film	The Naked Eye	No Effect On Resolution Standard
		Cover Tape	The Naked Eye	No Issue On Appearance.
Function	Image	No Communication	Test Board	Not Allowed
		Bright Pixel	Black Board	Not Allowed In the Image Center
		Dark Pixel	White board	Not Allowed In the Image Center
		Blurry	The Naked Eye	Not Allowed
		No Image	The Naked Eye	Not Allowed
		Vertical Line	The Naked Eye	Not Allowed
		Horizontal Line	The Naked Eye	Not Allowed
		Light Leakage	The Naked Eye	Not Allowed
		Blinking Image	The Naked Eye	Not Allowed
		Bruise	Inspection Jig	Not Allowed
		Resolution	Chart	Follows Outgoing Inspection Chart Standard
		Color	The Naked Eye	No Issue
		Noise	The Naked Eye	Not Allowed
		Corner Dark	The Naked Eye	Less Than 100px By 100px
		Color Resolution	The Naked Eye	No Issue
Dimension		Height	The Naked Eye	Follows Approval Data Sheet
		Width	The Naked Eye	Follows Approval Data Sheet
		Length	The Naked Eye	Follows Approval Data Sheet
		Overall	The Naked Eye	Follows Approval Data Sheet

www.KaiLapTech.com sales@KaiLapTech.com Tel: (852) 6908 1256 Fax: (852) 3017 6778

All rights reserved @ Kai Lap Technologies Group Ltd. Specifications subject to change without notice.

KLT Package Solutions

KLT Camera Module

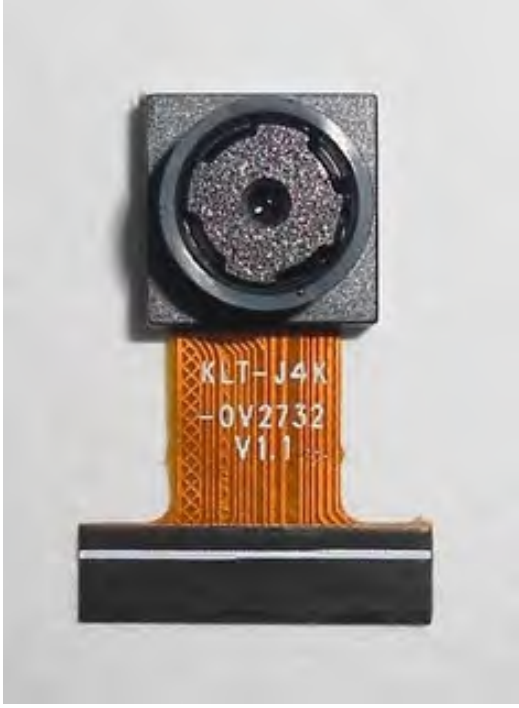

Complete with Lens Protection Film

Tray with Grid and Space

Place Cameras on the Tray

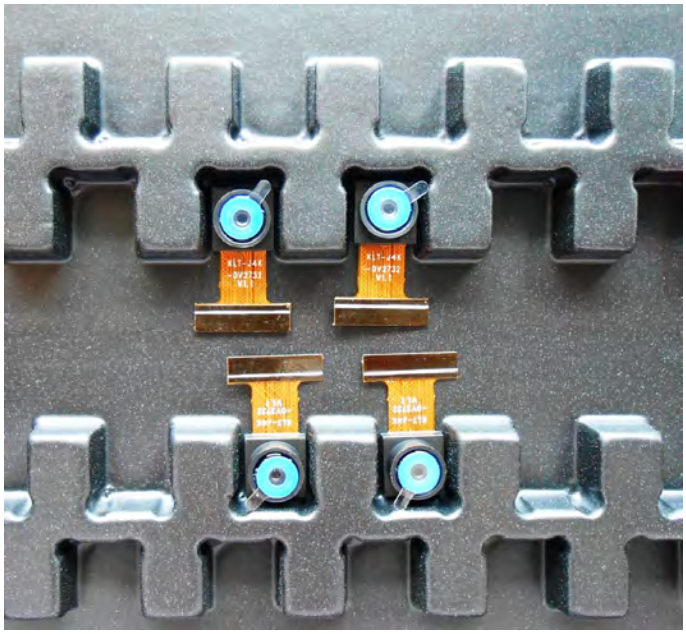

www.KaiLapTech.com sales@KaiLapTech.com Tel: (852) 6908 1256 Fax: (852) 3017 6778

All rights reserved @ Kai Lap Technologies Group Ltd. Specifications subject to change without notice.

Camera Modules Package Solution

Full Tray of Cameras

Cover Tray with Lid

Put Tray into Anti-Static Bag

Vacuum the Anti-Static Bag

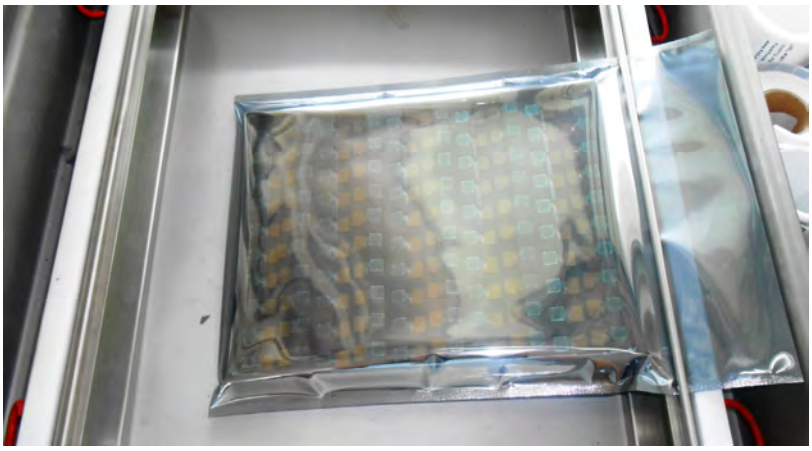

www.KaiLapTech.com sales@KaiLapTech.com Tel: (852) 6908 1256 Fax: (852) 3017 6778

All rights reserved @ Kai Lap Technologies Group Ltd. Specifications subject to change without notice.

Camera Modules Package Solution

Sealed Vacuum Bag with Labels
1. Model and Description 2. Quantity 3. Shipping Date 4. Caution

www.KaiLapTech.com sales@KaiLapTech.com Tel: (852) 6908 1256 Fax: (852) 3017 6778

All rights reserved @ Kai Lap Technologies Group Ltd. Specifications subject to change without notice.

Large Order Package Solution

Place Foam Sheets Between Trays

Foam Sheets are Slightly Larger than Trays

Place Foam Sheets and Trays into Box

Foam Sheets are Tightly Fitting Box

www.KaiLapTech.com sales@KaiLapTech.com Tel: (852) 6908 1256 Fax: (852) 3017 6778

All rights reserved @ Kai Lap Technologies Group Ltd. Specifications subject to change without notice.

Small Order Package Solution

Place Foam Sheets and Trays into Small Box

Foam Sheets are Nicely Fitting the Small Box

Package in Small Box for Shipment

Place Small Boxes into Larger Box

www.KaiLapTech.com sales@KaiLapTech.com Tel: (852) 6908 1256 Fax: (852) 3017 6778

All rights reserved @ Kai Lap Technologies Group Ltd. Specifications subject to change without notice.

Carbon Box Package Solution

Seal the Carbon Box

Final Package Labelled Box

Carbon Box Ready for Shipment
1. Delivery Address and Phone No. 2. Box No. and Ship Date 3. Fragile Caution

All rights reserved @ Kai Lap Technologies Group Ltd. Specifications subject to change without notice.

Sample Order Package Solution

Place Sample into Small Anti-Static Bag

Place Connectors into Small Ant-Static Bag

Sample Labels on the Small Bag
1. Camera Module or Connector Model 2. Shipping Date and Quantity 3. Caution

www.KaiLapTech.com sales@KaiLapTech.com Tel: (852) 6908 1256 Fax: (852) 3017 6778

All rights reserved @ Kai Lap Technologies Group Ltd. Specifications subject to change without notice.

Connectors Large Order Package Solution

Connectors in a Wheel

Label Connectors in the Wheel

The Wheel is Perfectly Fitting the Box

Connectors Box Ready for Shipment

www.KaiLapTech.com sales@KaiLapTech.com Tel: (852) 6908 1256 Fax: (852) 3017 6778

All rights reserved @ Kai Lap Technologies Group Ltd. Specifications subject to change without notice.

CMOS CAMERA MODULES

your BEST camera module partner

Company Kai Lap Technologies (KLT)

Kai Lap Technologies Group Limited. (KLT) was established in 2009, a next-generation technology driven manufacturer specialized in research, design, and produce of audio and video products. KLT is occupying 20,000 square feet automated plants with 100 employees of annual throughput 30,000,000 units cameras.

KLT provides OEM, ODM design, contract manufacturing, and builds the camera products. You may provide the requirements to us, even with a hand draft, our sales and engineering work together to meet your needs. We consider ourselves your last-term partner in developing practical and innovative solutions.

Our team covers everything from initial concept development to mass produced product. KLT specializes in customized camera design, raw material, electronic engineering, firmware/software development, product testing, and packing design. Our experienced strategic supply systems offer a robust and dependable manufacturing capacity for orders of various sizes.

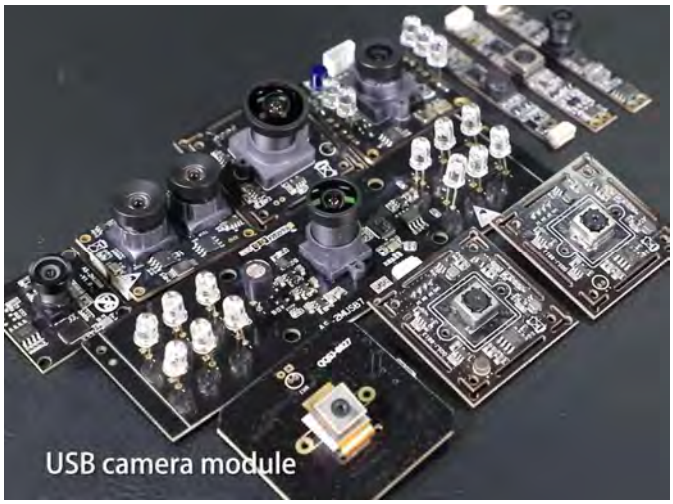

Limited Warranty

KLT provides the following limited warranty if you purchased the Product(s) directly from KLT company or from KLT's website, www.KaiLapTech.com. Product(s) purchased from other sellers or sources are not covered by this Limited Warranty. KLT guarantees that the Product(s) will be free from defects in materials and workmanship under normal use for a period of one (1) year from the date you receive the product ("Warranty Period").

For all Product(s) that contain or develop material defects in materials or workmanship during the Warranty Period, KLT will, at its sole option, either: (i) repair the Product(s); (ii) replace the Product(s) with a new or refurbished Product(s) (replacement Product(s) being of identical model or functional equivalent); or (iii) provide you a refund of the price you paid for the Product(s).

This Limited Warranty of KLT is solely limited to repair and/or replacement on the terms set forth above. KLT is not reliable or responsible for any subsequential events.

www.KaiLapTech.com sales@KaiLapTech.com Tel: (852) 6908 1256 Fax: (852) 3017 6778

All rights reserved @ Kai Lap Technologies Group Ltd. Specifications subject to change without notice.

KLT Strength

Powerful Factory

Professional Service

Promised Delivery

www.KaiLapTech.com sales@KaiLapTech.com Tel: (852) 6908 1256 Fax: (852) 3017 6778

All rights reserved @ Kai Lap Technologies Group Ltd. Specifications subject to change without notice.